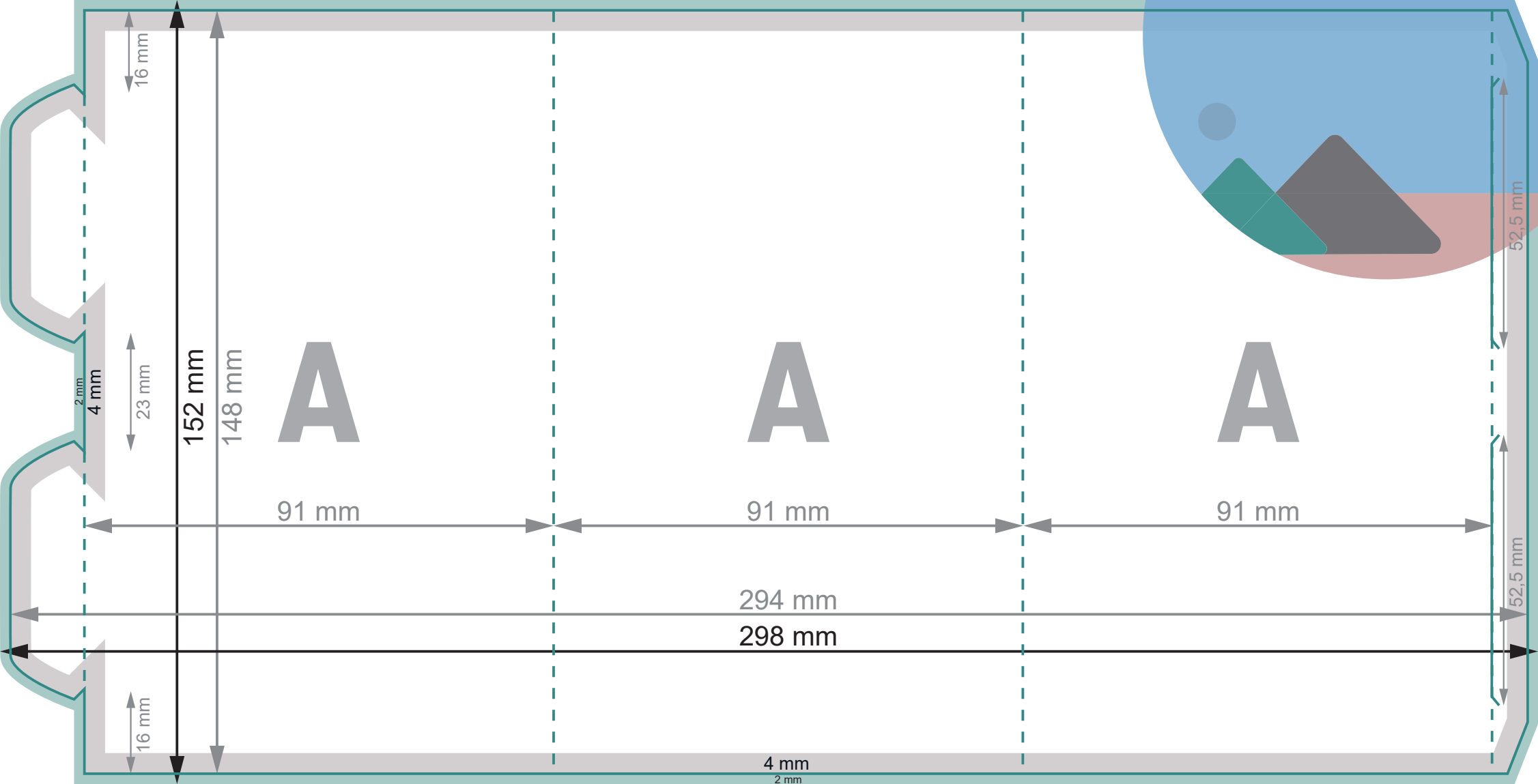
16 mm
152 mm
148 mm
2 mm
4 mm
23 mm
A
A
A
91 mm
91 mm
91 mm
52,5 mm
52,5 mm
294 mm
298 mm
16 mm
4 mm
2 mm

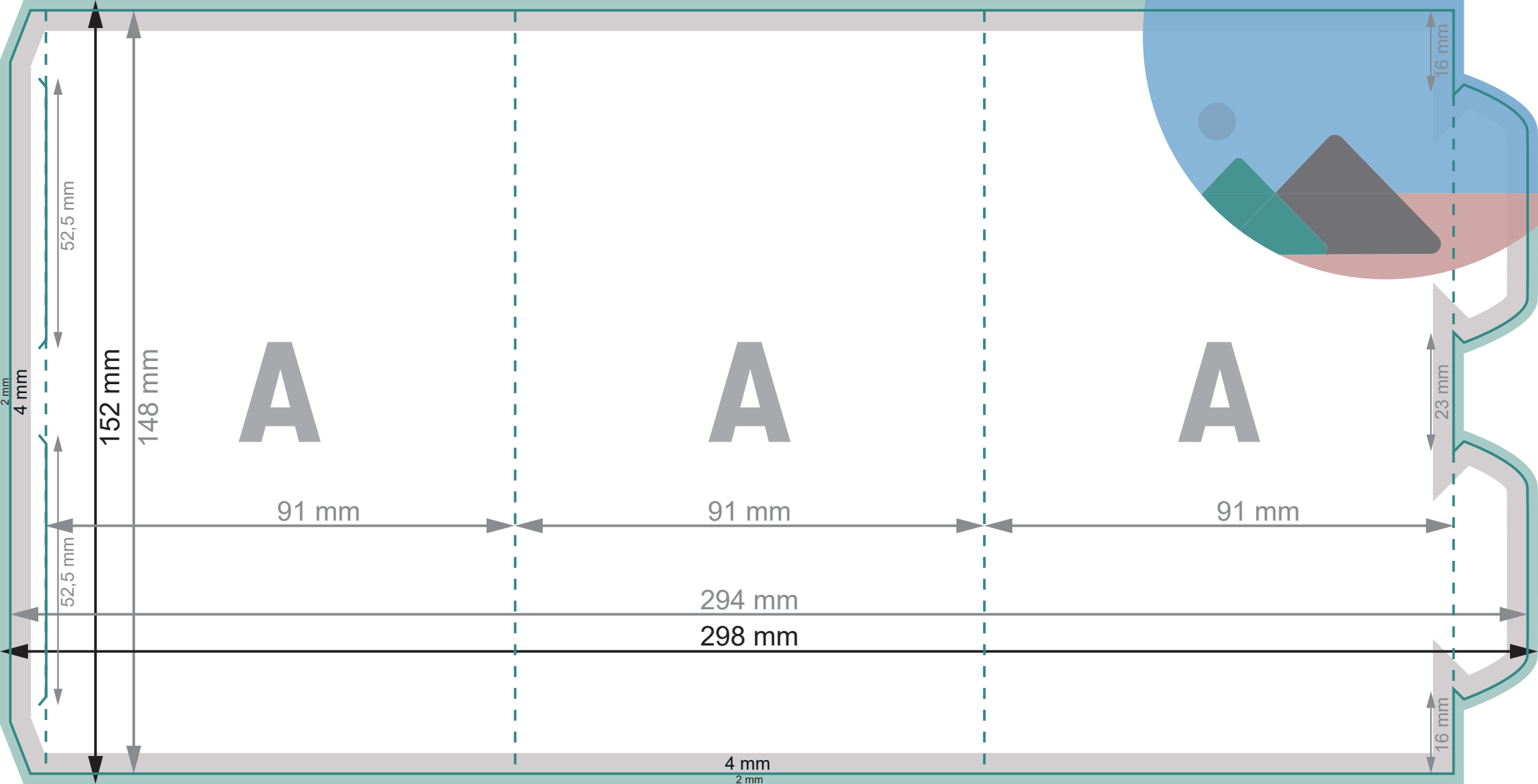
52,5 mm
2 mm
4 mm
152 mm
148 mm
A
A
A
91 mm
91 mm
91 mm
52,5 mm
294 mm
298 mm
16 mm
23 mm
16 mm
4 mm
2 mm